1. Especificación de producto - Datos técnicos

N.° de artículo	153540
Tipo	FN050-4DK.4I.V7P1
Denominación	Axial fan with sickle blades
Datos de medición	3~230/400V±10% D/Y 50Hz P_1 0,77kW 2.95/ 1.70A ∆I=0% 1300/min COSY 0,64 70°C 3~230/400V±10% D/Y 60Hz P_1 1,10kW 3,30/ 1,90A ∆I=0% 1400/min COSY 0,81 70°C 3~265/460V±10% D/Y 60Hz P_1 1,20kW 3,50/ 2,00A ∆I=0% 1480/min COSY 0,76 70°C
Conexión eléctrica	Terminal box K62
Temperatura mínima de funcionamiento °C	-40***
Tipo de montaje de la caja de bornas	Mounted on Stator
Tipo de protección	IP54
Clase de aislamiento térmico	THCL155
Diagrama de conexiones	1360-106XA
Placa de características	1x fixed
Posición de montaje	H/Vu/Vo
Protección del motor	thermal contact
Impregnación	Moisture and hot climate protection
Calidad de los rodamientos	ball bearing with long-time lubrication
Material del rotor	Aluminium
Pintura del rotor	unpainted
Material de las palas	Aluminium
Pintura del rodete	unpainted
Tipo de rejilla	ring grill
Control	--
Otro	All connecting elements in stainless steel.
Pintura de la suspensión del motor	Motor suspension powder-coated consistency class 2
Color de la suspensión	RAL 9005 (jet black)
Peso kg	13,30
Datos ErP	Efficiency η_{statA}: 33,4 % Efficiency grade: N_{actual} = 40,7 / N_{target} = 40* *ErP 2015

*** Continuous operation with occasional starts (S1) according to DIN EN 60034-1:2011-02. Occasional starting between -40 and -25 °C is permissible. Continuous operation below -25 °C only with special bearings for refrigeration applications on request.
Permissible minimum and maximum ambient temperature for operation:
Please refer to the technical documentation of the product for the minimum and maximum ambient temperature valid for the respective fan. Operation below -25 °C as well as partial load operation for refrigeration applications is only possible with special bearings for refrigeration applications on request. If special bearings for refrigeration applications are installed in the fan, please observe the permissible maximum temperatures in the technical documentation of the product.
Ball-bearing service life:
The according to standard calculation methods determined bearing service life expectation of the motor-integrated ball bearings is mainly determined by the grease service life F10h and amounts for standard application to approx. 30.000 – 40.000 operating hours. The fan is maintenance-free due to the use of ball bearings with "lifetime lubrication". Once the grease operating life F10h has been reached, it may be necessary to replace the bearing. The bearing service life expectation may change compared to the specified value, if operating conditions such as increased vibrations or shocks, increased or too low temperatures, humidity, dirt in the ball bearing or unfavourable control modes are present. A service life calculation for special applications can be provided on request.

© ZIEHL-ABEGG SE
All rights reserved. Confidential and proprietary document, not to be disclosed or used except in accordance with applicable agreements. No disclosure to third parties, if not expressively agreed by ZA SE.

2. Curva característica

FN050-4DK.4I.V7P1	Measured with full nozzle without guard grille in installation type A according to ISO 5801
3~ 230V 50Hz D	Messdichte 1,16

Rendimiento del aire

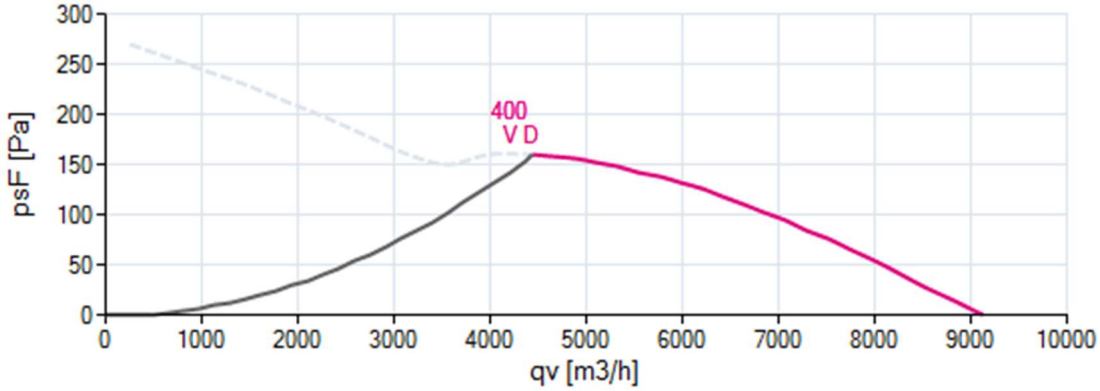

Acústica

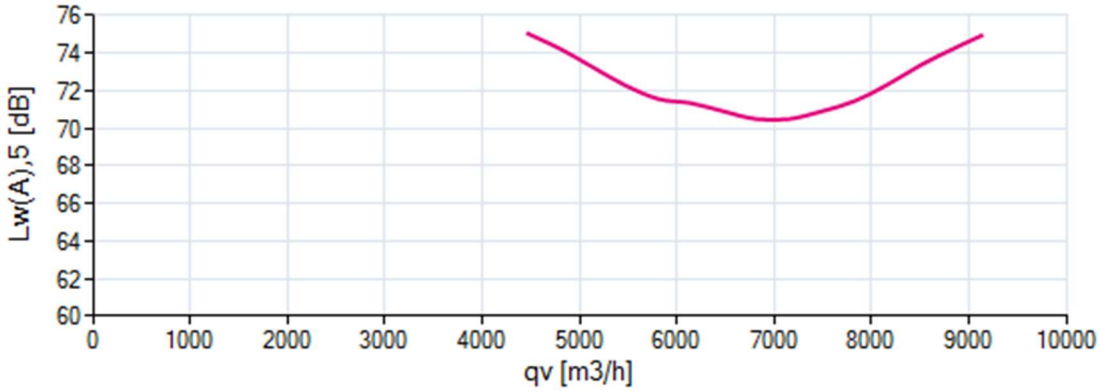

Potencia de entrada

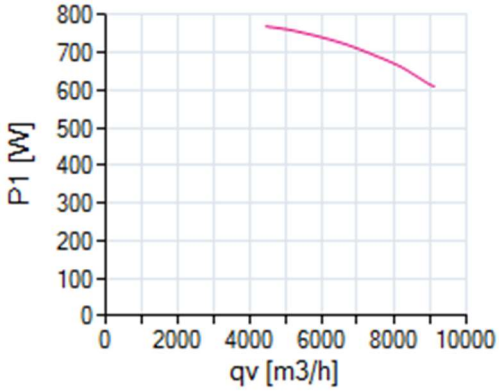

Eficiencia

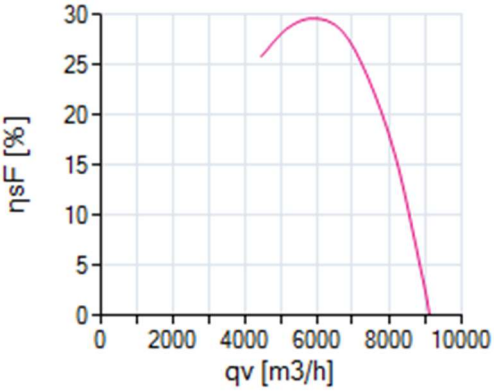

83855

Please note: It’s not allowed to use this fan in the stall area!*

© ZIEHL-ABEGG SE
All rights reserved. Confidential and proprietary document, not to be disclosed or used except in accordance with applicable agreements. No disclosure to third parties, if not expressively agreed by ZA SE.

*In doubt please ask your responsible ZIEHL-ABEGG sales contact.

3. Plano

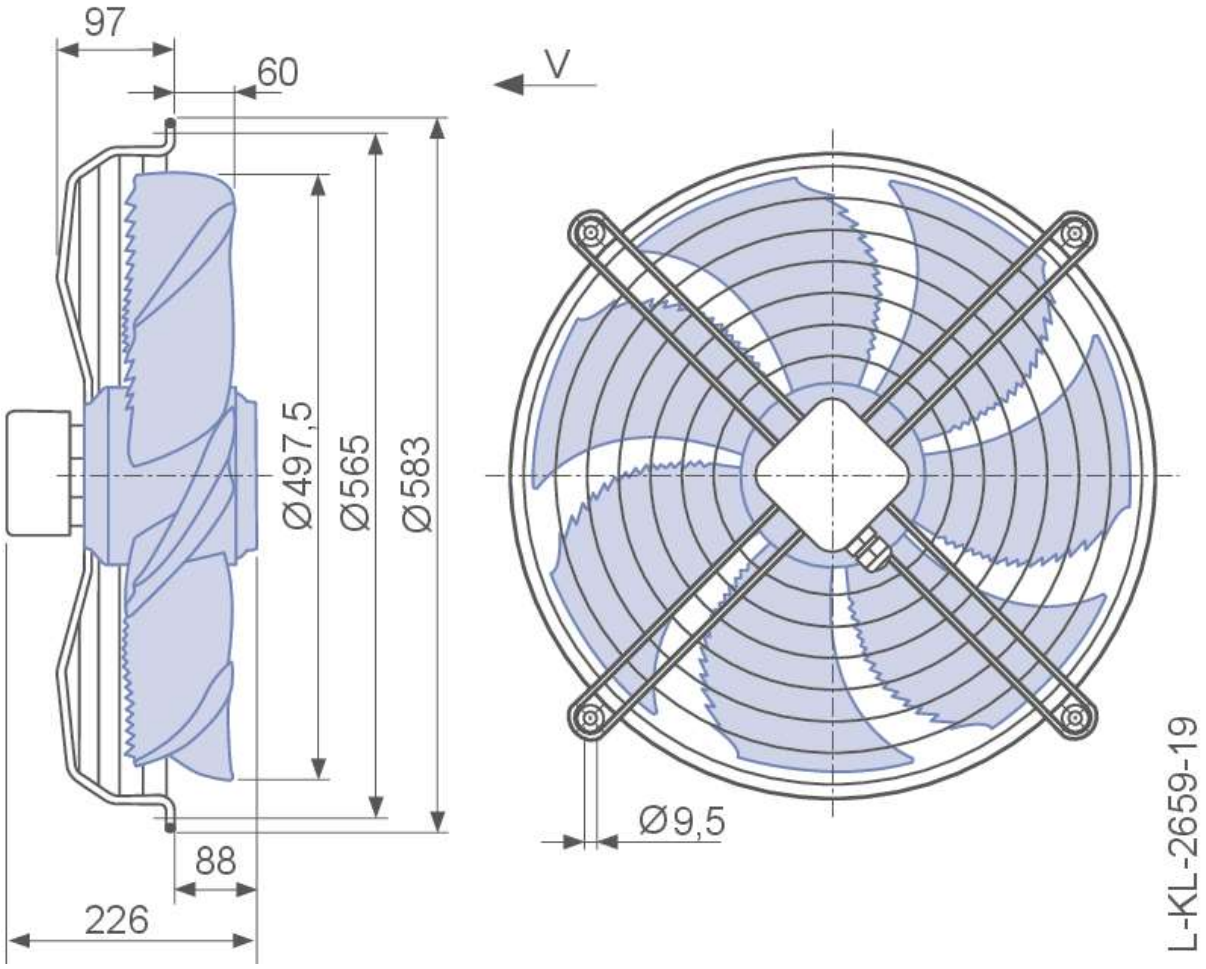

Dimensiones en mm
El esquema adjunto es sólo a efectos de dimensiones.

© ZIEHL-ABEGG SE
All rights reserved. Confidential and proprietary document, not to be disclosed or used except in accordance with applicable agreements. No disclosure to third parties, if not expressively agreed by ZA SE.

4. Diagrama de conexiones

1360-106XA

3~ motor with one speed and thermostatic switch (if built in).

U1	brown
V1	blue
W1	black
U2	red
V2	grey
W2	orange
TB	white

Δ-connection

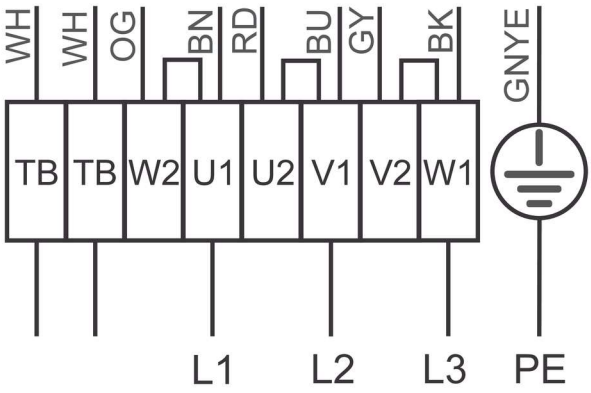

Y-connection

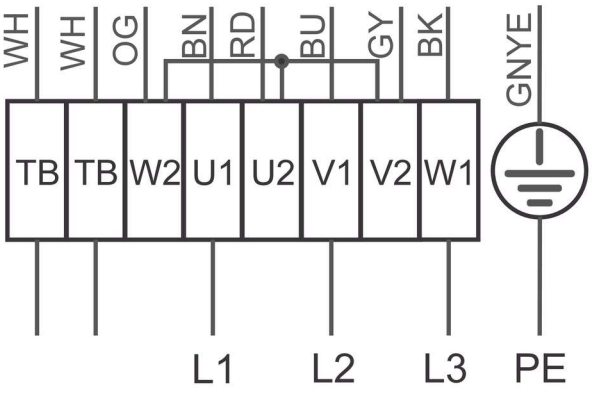

© ZIEHL-ABEGG SE
All rights reserved. Confidential and proprietary document, not to be disclosed or used except in accordance with applicable agreements. No disclosure to third parties, if not expressively agreed by ZA SE.

5. EU-Declaración de conformidad

EU declaration of conformity

- Translation -
(english)

ZA75-GB 1910 Index 015

Manufacturer: **ZIEHL-ABEGG SE**
Heinz-Ziehl-Straße
74653 Künzelsau
Germany

The manufacturer is solely responsible for issuance of the declaration of conformity.

The products:

- External rotor motor MK.., MW..
- Axial fan DN.., FA.., FB.., FC.., FE.., FF.., FG.., FH.., FL.., FN.., FS.., FT.., FV.., VN.., VR.., ZC.., ZF.., ZG.., ZN..
- Centrifugal fan ER.., GR.., RA.., RD.., RE.., RF.., RG.., RH.., RK.., RM.., RR.., RZ.., WR..
- Cross-flow fan QG.., QK.., QR.., QT..

The motor type:

- Asynchronous internal or external rotor motor
- Asynchronous internal or external rotor motor with integrated frequency inverter
- Electronically commutated internal or external rotor motor
- Electronically commutated internal or external rotor motor with integrated EC controller

These products comply with the following EU directives:

- EMC Directive 2014/30/EU
- Low Voltage Directive 2014/35/EU
- ErP Directive 2009/125/EC, in conjunction with Regulation (EU) no. 327/2011

The following harmonised standards have been used:

EN 60034-1:2010 + Cor.:2010
EN 60204-1:2006 + A1:2009 + AC:2010
EN 60529:1991 + A1:2000 + A2:2013
EN 61000-6-3:2007 + A1:2011 + AC:2012
EN 61000-6-2:2005 + AC:2005

Compliance with the ErP Directive 2009/125/EC does not refer to external rotor motors MK.., MW..

All ErP-relevant information comprises measurements which are determined using a standardised measurement set-up. More details can be obtained from the manufacturer.

Compliance with the EMC Directive 2014/30/EU refers only to those products when they are connected by mounting / operating instructions. If these products are integrated into a system or supplemented with other components (e.g. sensing controls) and operated, the manufacturer or operator is responsible of the overall system for compliance with the EMC Directive 2014/30/EU.

Künzelsau, 05.03.2019
(location, date of issue)

ZIEHL-ABEGG SE
Dr. W. Angelis
Technical Director Air Movement Division
(name, function)

i. V. W. Angelis

(Signature)

ZIEHL-ABEGG SE
Dr. D. Kappel
Deputy Head of Electrical Systems
(name, function)

i. V. Daniel Kappel

(Signature)

ZIEHL-ABEGG

© ZIEHL-ABEGG SE
All rights reserved. Confidential and proprietary document, not to be disclosed or used except in accordance with applicable agreements. No disclosure to third parties, if not expressively agreed by ZA SE.